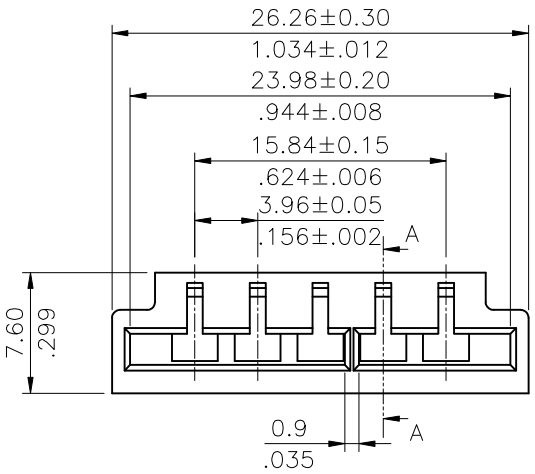

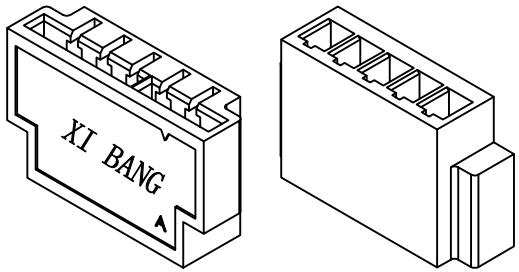

Material:

Insulator: Nylon 66 UL 94V-2, Color Nature

Ordering Code:

CP48	05	S	0000	-NH
①	②	③	④	⑤

① Series No.
② No. of Circuits: 5 PIN
③ S= Connector Housing
④ Other option:
0000= Standard
△1 ⑤ -NH= Halogen-Free

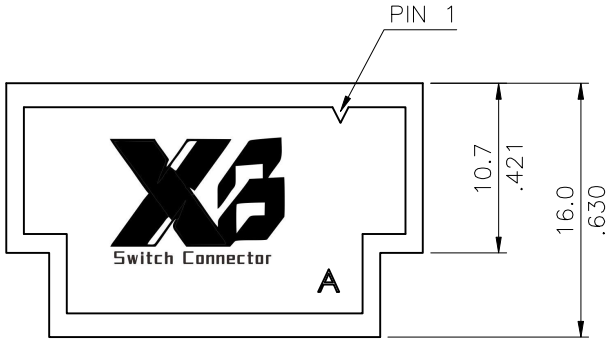

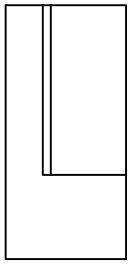

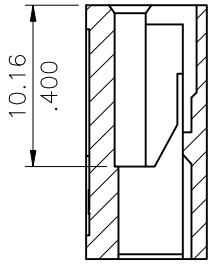

SEC.A-A

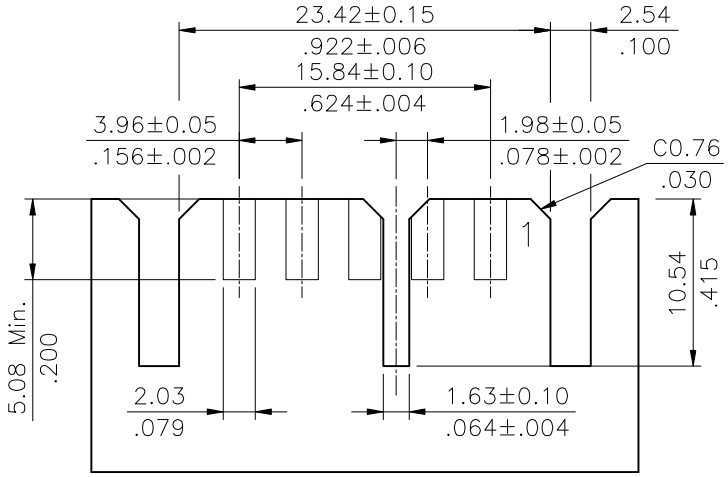

Generic PCB Layout
PCB Thickness: 1.57mm

Halogen-Free

RoHS Compliant

SYM	NAME	DATE	REVISIONS
△4			
△3			
△2			
△1	Sun	11/11-21'	ECNT121283

		DATE
DRAWN BY:	Sun	11/15-21'
ENGINEER:	Sun	11/15-21'
CHECKED BY:	Eisley	11/16-21'
APPROVED BY:	Eisley	11/16-21'

UNIT: mm / inch

TOLERANCE UNLESS OTHERWISE SPECIFIED

.X ± 0.38	X.° ± 1°
.XX ± 0.25	
.XXX ± 0.10	

TITLE: CP48 Housing

MATERIAL:

FINISH:

东莞市溪榜电子有限公司
DONG GUAN XI BANG ELECTRONI CS CO., LTD.

DRAWING NO.	CP4801SB	PART NO.	CP4805S0000-NH
SCALE	2 / 1	SHEET 1 OF 1	