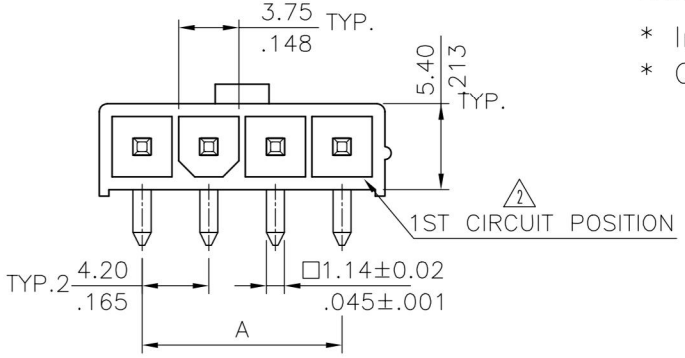

Material:

* Insulation: Nylon 66 , Color Nature
* Contact: Brass

Ordering Code:

CP-01 4 ** 1 * S
① ② ③ ④ ⑤ ⑥

① Series No.
② Type of Connector:
4= Right angle PCB mount header
③ No of Circuits:
④ Plating Code: 1= Tin over Nickel
2= Gold flash plated over Nickel
3= 0.38μm(15μ") Gold plated over 1.27μm(50μ") Nickel
4= 0.76μm(30μ") Gold plated over 1.27μm(50μ") Nickel
⑤ Variation: 1= UL 94V-2, Without mounting ears
3= UL 94V-0, Without mounting ears
⑥ S= Single Row Header

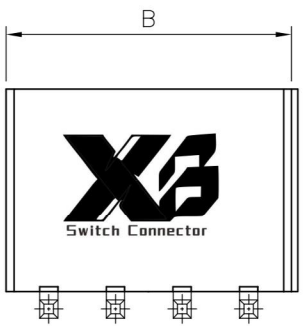

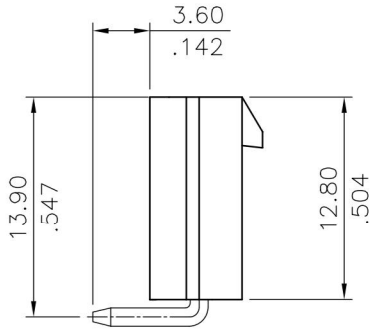

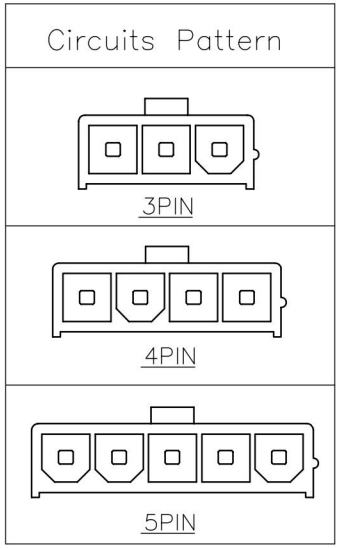

Circuits	Dimension	
	A	B
3	8.4(.331)	13.8(.543)
4	12.6(.496)	18.0(.709)
5	16.8(.661)	22.2(.874)

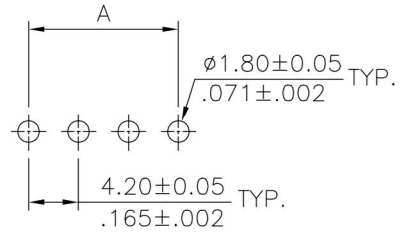

Recommended P.C. Board Layout

Tin-Lead Process

RoHS Compliant

SYM	NAME	DATE	REVISIONS
4			
3			
2	Sandy	9/19-08'	ECN08463
1	Hank	10/4 07'	ECN07412

		DATE
DRAWN BY:	Sandy	9/19-08'
ENGINEER:	Eisley	9/19-08'
CHECKED BY:	Alex	9/19-08'
APPROVED BY:	Alex	9/19-08'

UNIT: mm / inch

TOLERANCE UNLESS OTHERWISE SPECIFIED

.X ± 0.38/.015	X.° ± 1°
.XX ± 0.25/.010	.X° ±
.XXX ± 0.10/.004	.XX° ±

TITLE: RIGHT ANGLE HEADER CP-01 POWER CONNECTOR

MATERIAL:

FINISH:

东莞市溪榜电子有限公司
DONG GUAN XI BANG ELECTRONI CS CO., LTD.

DRAWING NO.	CP0157AC	PART NO.	CP-014**11S CP-014**13S
SCALE	3 / 1	SHEET	1 OF 1