Notes:

1. Material:
   Insulation: Nylon 6 UL 94V-2
   Contact: Brass
2. Circuit Pattern Schedule: See Drawing No. CP0111S*
3. (1) Glow wire requirement:
   IEC 60695-2-12 GWFI 960°C@0.38mm & 930°C@0.75mm & 960°C@1.50mm & 960°C@3.00mm
   IEC 60695-2-11 GWEPT 750°C ≤2S

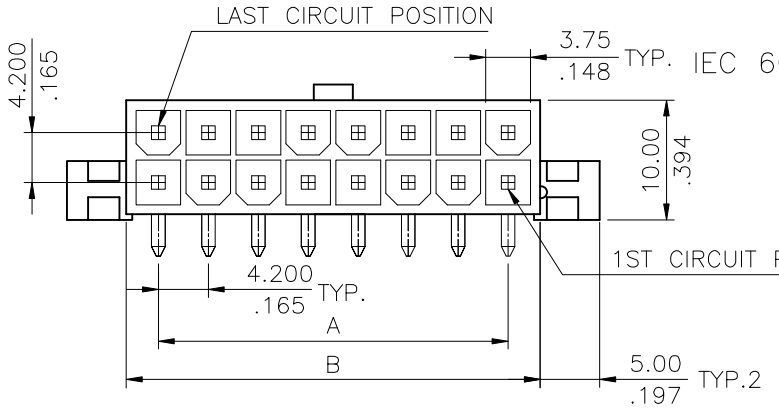

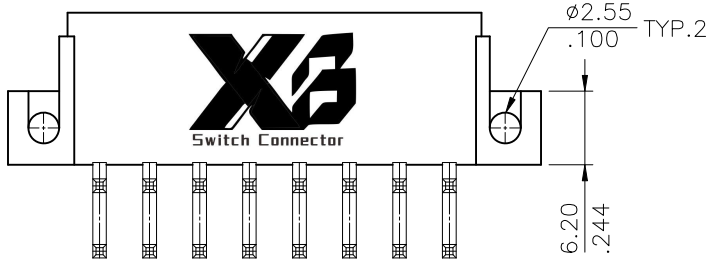

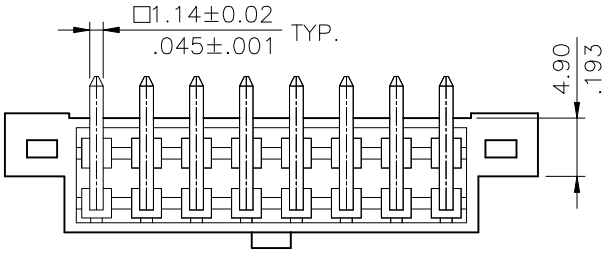

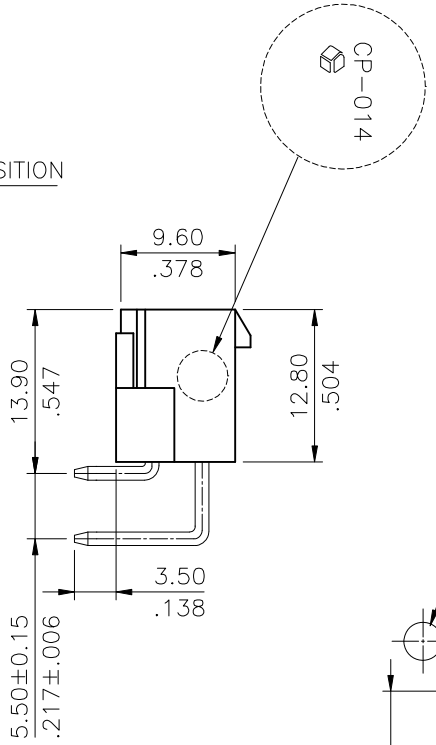

Ordering Code:

CP-01	4	**	1	F	0
①	②	③	④	⑤	⑥

① Series No.
② Type of Connector:
4= Right angle PCB mount header
③ No of Circuits:
④ Plating Code:
1= Tin over Nickel
2= Gold flash plated over Nickel
3= 0.38μm(15μ") Gold plated over 1.27μm(50μ") Nickel
4= 0.76μm(30μ") Gold plated over 1.27μm(50μ") Nickel
⑤ Variation: F= UL 94V-2, With mounting ears (Glow wire available)
⑥ Option: 0= Standard

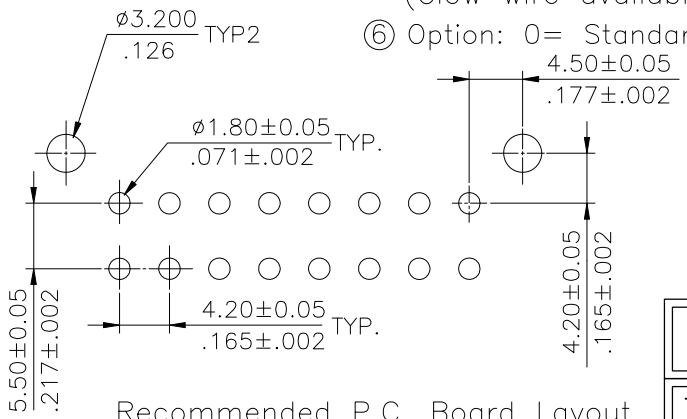

Recommended P.C. Board Layout

Tin-Lead Process

RoHS Compliant

SYM	NAME	DATE	REVISIONS
4			
3			
2			
1	Kenny	8/26-20'	ECNT120227

		DATE
DRAWN BY:	Kenny	8/26-20'
ENGINEER:	Sun	9/1-20'
CHECKED BY:	Eisley	9/4-20'
APPROVED BY:	Eisley	9/4-20'

UNIT: mm / inch

TOLERANCE UNLESS OTHERWISE SPECIFIED

.X ± 0.38/.015	X.° ± 1°
.XX ± 0.25/.010	.X° ±
.XXX ± 0.10/.004	.XX° ±

TITLE: RIGHT ANGLE HEADER CP-01 POWER CONNECTOR

MATERIAL:

FINISH:

东莞市溪榜电子有限公司
DONG GUAN XI BANG ELECTRONI CS CO., LTD.

DRAWING NO.	CP0155AB	PART NO.	CP-014***F0
SCALE	2 / 1	SHEET 1 OF 1	