Notes:
* Insulation: Nylon 66, Color Nature
* Contact: Brass
* For Tin-Lead wave flow process

Circuits	Dimension	
	A	B
4	4.20(.165)	15.2(.598)
6	8.40(.331)	19.4(.764)
8	12.60(.496)	23.6(.929)
10	16.80(.661)	27.8(1.094)
14	25.20(.992)	36.2(1.425)
18	33.60(1.323)	44.6(1.756)
24	46.20(1.819)	57.2(2.252)

Ordering Code:

CP-01 4 ** * * 0
① ② ③ ④ ⑤ ⑥

① Series No.
② Type of Connector:
4= Right angle PCB mount header
③ No of Circuits:
④ Plating Code: 1= Tin over Nickel
2= Gold flash plated over Nickel
3= 0.38μm(15μ") Gold plated over 1.27μm(50μ") Nickel
4= 0.76μm(30μ") Gold plated over 1.27μm(50μ") Nickel
⑤ Variation: 6= UL 94V-2, BMI type
7= UL 94V-0, BMI type
⑥ Option: 0= Standard

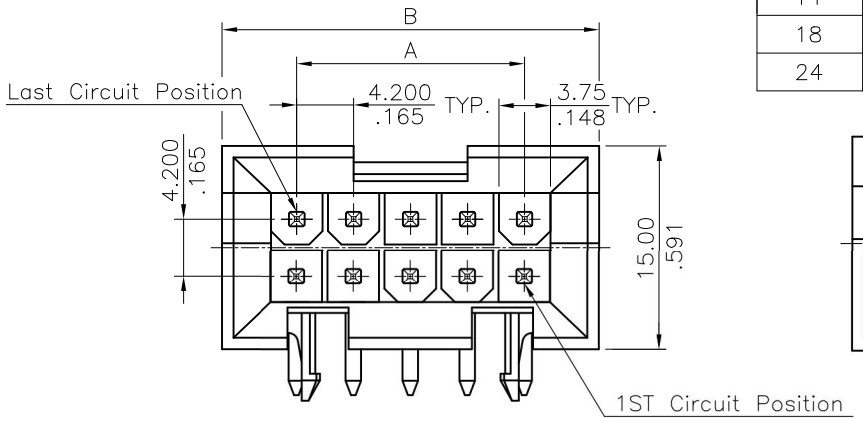

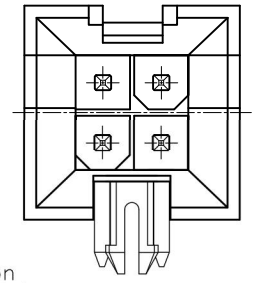

4 CIRCUITS
P/N:CP-01404**0

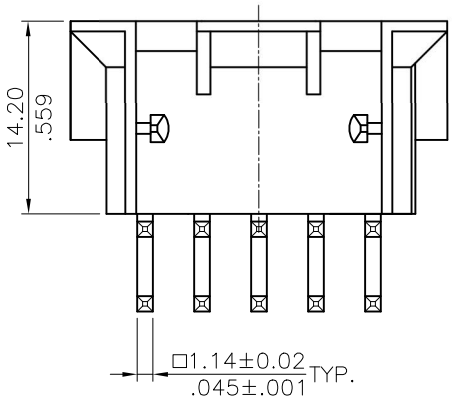

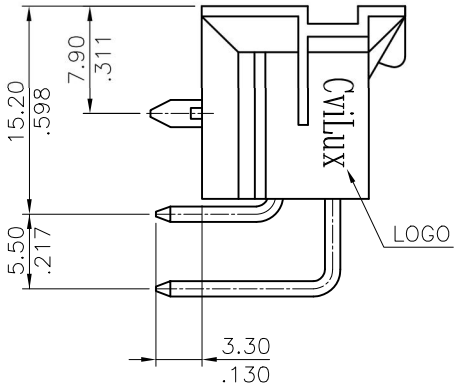

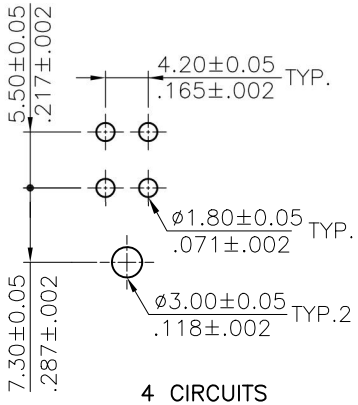

4 CIRCUITS

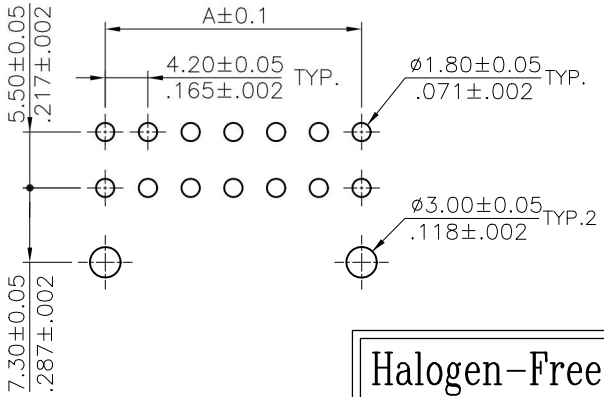

Recommended P.C. Board layout

Halogen-Free

Tin-Lead Process

RoHS Compliant

SYM	NAME	DATE	REVISIONS
4			
3			
2			
1	Karen	10/4-13'	ECNT113068

		DATE
DRAWN BY:	Karen	10/4-13'
ENGINEER:	Eisley	10/4-13'
CHECKED BY:	Eisley	10/4-13'
APPROVED BY:	David	10/4-13'

UNIT: mm / inch

TOLERANCE UNLESS OTHERWISE SPECIFIED

.X ± 0.38/.015	X.° ± 1°
.XX ± 0.25/.010	.X° ±
.XXX ± 0.10/.004	.XX° ±

TITLE: CP-014 SERIES BMI RIGHT ANGLE TYPE CONN.

MATERIAL:

FINISH:

东莞市溪榜电子有限公司
DONG GUAN XI BANG ELECTRONI CS CO., LTD.

DRAWING NO.	CP0137SG	PART NO.	CP-014***60 CP-014***70
SCALE	2 / 1	SHEET 1 OF 1	