* Material: Noryl UL 94V-1
  Color Black
* Without polarizing rib --- P/N: CI34**S0010
* With Polarizing rib ----- P/N: CI34**S001A

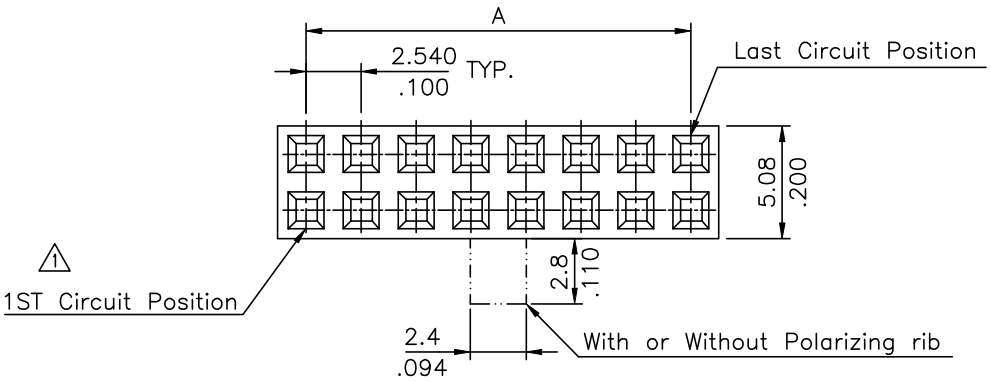

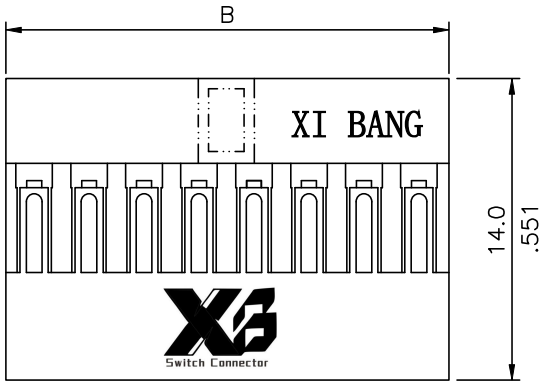

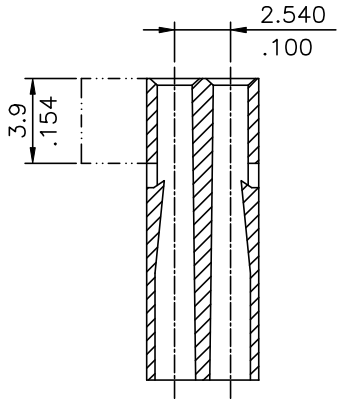

2

Circuits	Dimension	
	A	B
4	2.54(.100)	5.1(.201)
6	5.08(.200)	7.6(.299)
8	7.62(.300)	10.2(.402)
10	10.16(.400)	12.7(.500)
12	12.70(.500)	15.2(.598)
14	15.24(.600)	17.8(.701)
16	17.78(.700)	20.3(.799)
18	20.32(.800)	22.9(.902)
20	22.86(.900)	25.4(1.000)
22	25.40(1.000)	27.9(1.098)
24	27.94(1.100)	30.5(1.201)

RoHS Compliant

SYM	NAME	DATE	REVISIONS
4			
3			
2	Sun	3/11-24'	ECRT123086/ECNT124004
1	Sandy	11/10-10'	ECN10365

		DATE
DRAWN BY:	Sun	3/11-24'
ENGINEER:	Sun	3/11-24'
CHECKED BY:	Eisley	3/11-24'
APPROVED BY:	Eisley	3/11-24'

UNIT: mm / inch

TOLERANCE UNLESS OTHERWISE SPECIFIED

.X ± 0.30/.012	X.° ± 1°
.XX ± 0.20/.008	.X° ±
.XXX ± 0.10/.004	.XX° ±

TITLE: 2.54MM(.100")
DUAL ROW CRIMP TERMINAL HOUSING

MATERIAL:

FINISH:

东莞市溪榜电子有限公司
DONG GUAN XI BANG ELECTRONI CS CO., LTD.

DRAWING NO.	CI3401SE	PART NO.	CI34**S001*
SCALE	3 / 1	SHEET 1 OF 1	