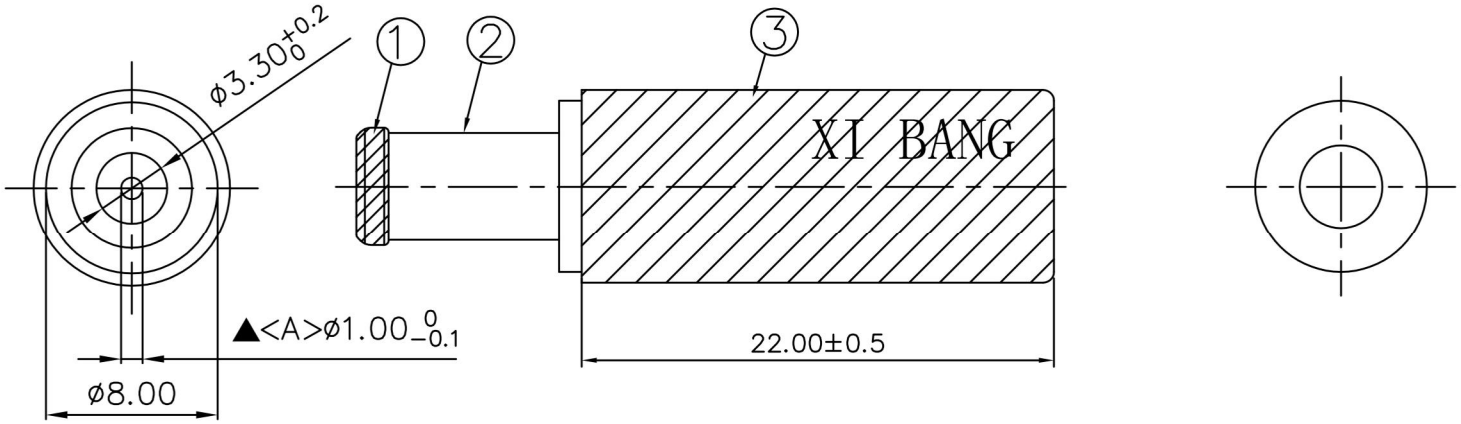

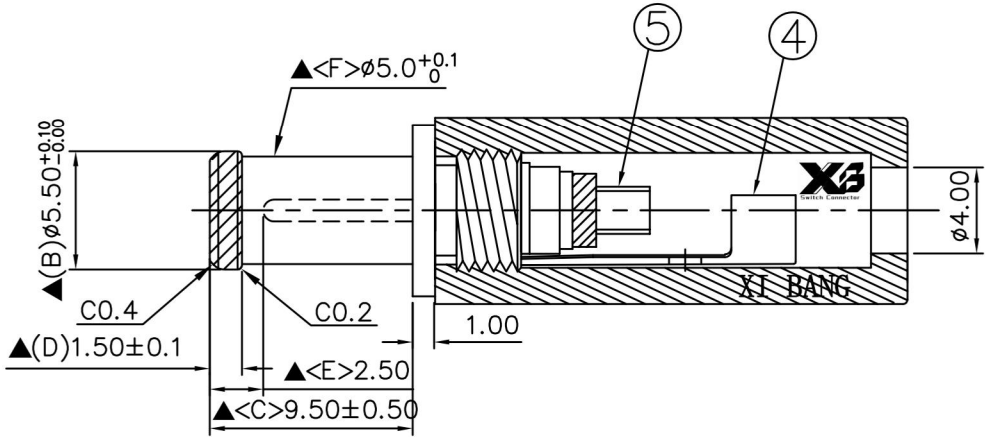

NO.	Description	Material	Q'TY	Finish
5.	Terminial	Brass	1	Nickel Plated
4.	Ground Terminal	Brass	1	Nickel Plated
3.	Housing	ABS	1	Black Color
2.	Outer Sleeve	Brass	1	Nickel Plated
1.	Insulator Ring	POM	1	Yellow Color

东莞市溪榜电子有限公司
Switch Connector DONG GUAN XI BANG ELECTRONICS CO., LTD

DATE	DWN	CHKD	APVD	MANAGER
07.12.2006				

PART NAME : AEESMBLY TYPE DC PLUGø5.0Xø1.0

PART NUMBER : XB-DC-T-901B0N00000G

VERSION:4.0

TOLERANCE :0>1.0:±0.1 1.0>6.0:±0.2
6.0>12.0:±0.3 12.0>25.0:±0.4 25.0>:±0.5

UNIT:mm

SCALE:1/1

RoHS Compliant

For Reference 僅供參考

SPECIFICATIONS:
Contact Resistance : 30mΩ max
Insulation Resistance : 100MΩ min. at DC 500V
Dielectric Withstand Voltage : AC 500V for one minute
Remark: ▲: The Most Important Dimension