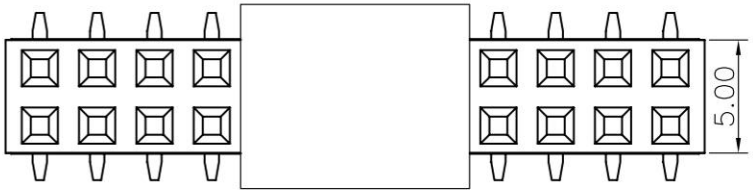

Dim.D	NOTE
4.00mm	02~03Pin
10.15mm	04~40Pin

Specifications
Current Rating:3.0Amp
Insulation Resistance:1000MΩMin.
Dielectric Withstanding Voltage:600VAC
Contact Resistance:20mΩMax.
Operating Temperature:−40°C to +105°C
Materials
Contact Material:
Phosphor Bronze
Insulator Material:
Nylon(High temperature resistance),
LCP(High temperature resistance),
UL 94V−0
All materials must meet XI BANG hazardous substances control standards.

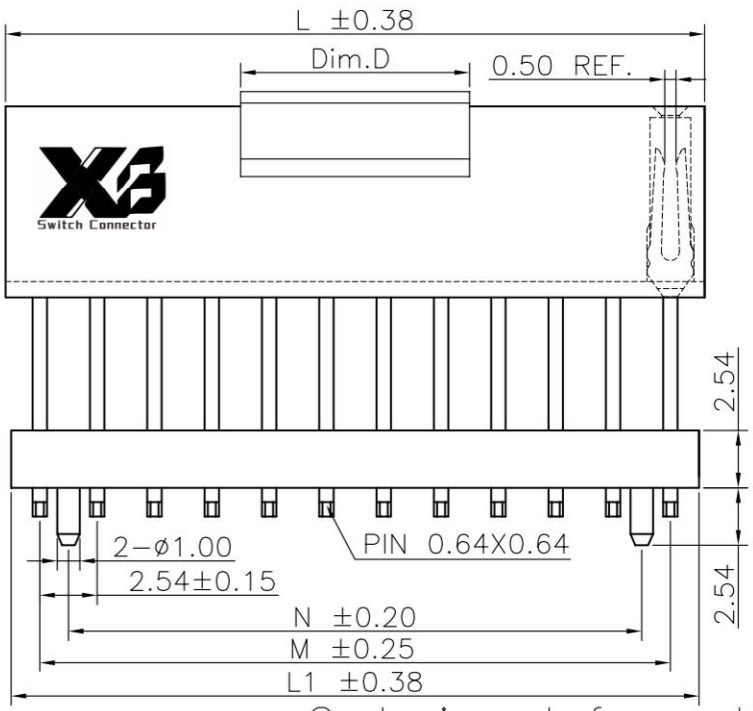

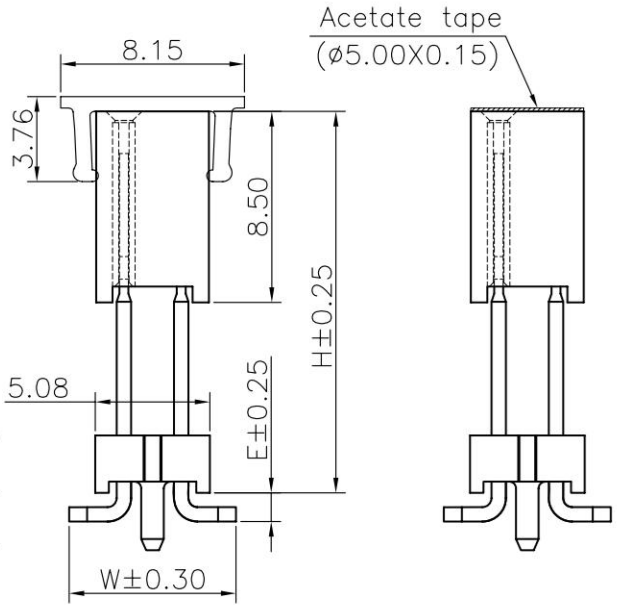

Recommended P.C.Board Layout
(Tolerance:±0.05)

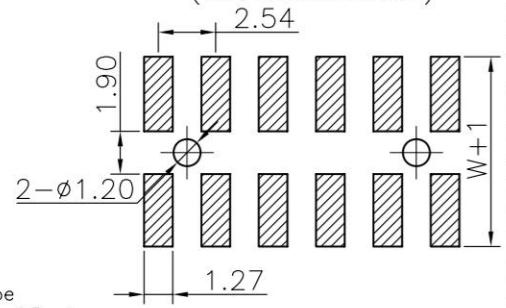

No. of PIN/ROW	Dimension Information			
	M	L	L1	N
02	2.54	5.58	5.08	--
03	5.08	8.12	7.62	2.54
04	7.62	10.66	10.16	5.08
05	10.16	13.20	12.70	7.62
06	12.70	15.74	15.24	10.16
07	15.24	18.28	17.78	12.70
08	17.78	20.82	20.32	15.24
09	20.32	23.36	22.86	17.78
10	22.86	25.90	25.40	20.32
11	25.40	28.44	27.94	22.86
12	27.94	30.98	30.48	25.40
13	30.48	33.52	33.02	27.94
14	33.02	36.06	35.56	30.48
15	35.56	38.60	38.10	33.02
16	38.10	41.14	40.64	35.56
17	40.64	43.68	43.18	38.10
18	43.18	46.22	45.72	40.64
19	45.72	48.76	48.26	43.18
20	48.26	51.30	50.80	45.72
21	50.80	53.84	53.34	48.26
22	53.34	56.38	55.88	50.80
23	55.88	58.92	58.42	53.34
24	58.42	61.46	60.96	55.88
25	60.96	64.00	63.50	58.42
26	63.50	66.54	66.04	60.96
27	66.04	69.08	68.58	63.50
28	68.58	71.62	71.12	66.04
29	71.12	74.16	73.66	68.58
30	73.66	76.70	76.20	71.12
31	76.20	79.24	78.74	73.66
32	78.74	81.78	81.28	76.20
33	81.28	84.32	83.82	78.74
34	83.82	86.86	86.36	81.28
35	86.36	89.40	88.90	83.82
36	88.90	91.94	91.44	86.36
37	91.44	94.48	93.98	88.90
38	93.98	97.02	96.52	91.44
39	96.52	99.56	99.06	93.98
40	99.06	102.10	101.60	96.52

Ordering Information

XB-PM-C-254-204

- Plastic specifications
  1=Single row
  2=Dual row
  3=Tripe row
  4=Quadruple
- Water code
- No. of Pins per Row
  02~40
- Plating code
  01=Tin
  02=Gold Flash
  05=Gold Flash/Tin
  22=Matte Tin
- Positioning column information
  A=No locating post
  B=Round post
  C=Square post
- Pin length
  See the drawing
- Insulator Material
  R=Nylon(Halogen Free)
  C=LCP
- Color
  1=Black
  2=White
  3=Yellow
  E=Beige
- Contact Material
  A/S/K/T=Phosphor Bronze
- Packing code
  A=Box
  C=Tube
  D=Tape&Reel
  E=Cap+Tube
  F=Cap+Tape&Reel
  G=Acetate Tape+Tube
  H=Acetate Tape+Tape&Reel

东莞市溪榜电子有限公司
DONG GUAN XI BANG ELECTRONI CS CO., LTD.

REV.	UNIT.	SCALE.	PAGE.
01	mm	4:1	1/1

GENERAL TOLERANCE	
X.°±5.0°	X.±0.30
.X°±3.0°	.X±0.25
.XX°±2.0°	.XX±0.15
.XXX°±1.0°	.XXX±0.10

DWG. NO. XB-PM-C-254-204

PART NO. XB-PM-C-254-204

TITLE. 2.54 FEMALE HEADER DUAL ROWS SMT TYPE CONNECTOR