ROHS

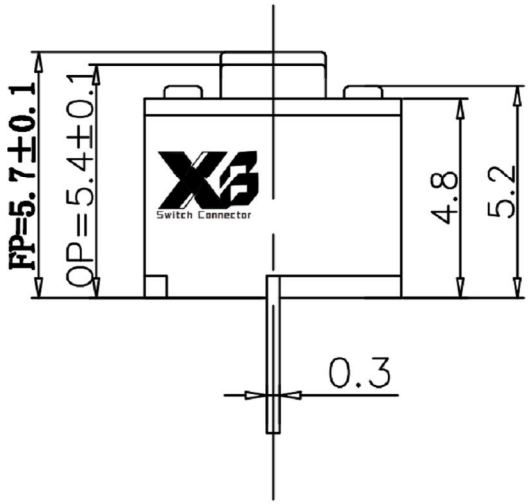

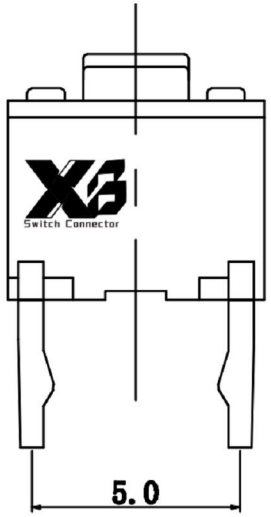

安装孔位图

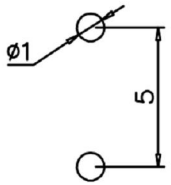

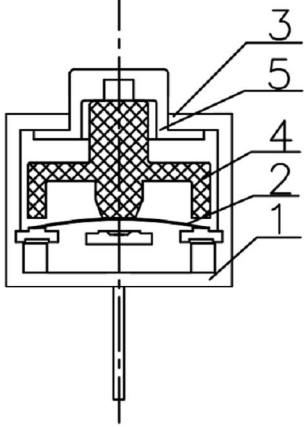

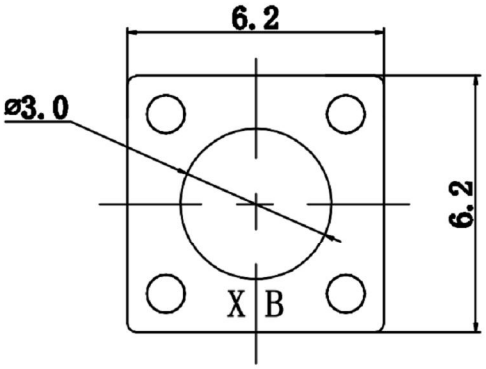

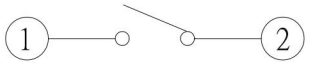

CIRCUIT DIAGRAM

SPECIFICATIONS

Rating	DC 12V 50mA
Contact Resistance	100mΩ Max.
Travel	0.3±0.1mm
Operating Force	60gf 70gf 80gf 90gf
Operating Life(cycles)	100,0000

序号	编号	材 料	数量	材 料
5	HS6.0428.057-5	按 钮	1	PPA(绿色)
4	HS6.0428.332-4	按 垫	1	橡胶(粉色)
3	HS6.0428.225-3	盖 板	1	PPA(黑色)
2	HS6.0428.005-2	簧 片	1	单面复银不锈钢0.05mm
1	HS6.0428.043-1	基 座 组	1	PPA(灰)黄铜带H65Y0.3mm

The material contained in this drawing is the property of XiBang. Any use other than that speclfically authorized by XiBang i5 prohibited. The above drawing IS subjected to change for improvement without prior notice.

东莞市溪榜电子有限公司
DONG GUAN XI BANG ELECTRONICS CO.,LTD

Switch Connector

TITLE : XB TACT SWITCH

MODEL : XB-TS-2DV057 轻触开关卡角有声/无声 6.2x6.2x5.7mm

UNIT :	MM	DWN.		DATE	
SCALE :	5 : 1	CHK'D		DATE	
VERSION	01	APPD.		DATE	

TOLERANCE
<=1.5mm ±0.1
> 1.5mm ±0.2
>=10.0mm ±0.3

ANGLE TOL
±2°

NO.	PART NAME	MATERIAL	QTY.	FINISHING
8	REEL	PS	1	BLUE
7	CARRIER	PS	1	CLEAR
6	COVER TAPE	PS	1	CLEAR
5	CONTACT	PBS STRIP	1	Ag CLAD
4	COVER	IRON STRIP	1	Ni PLATED
3	CASE	NYLON	1	BLACK
2	TERMINAL	BRASS STRIP	2	Ag PLATED
1	KNOB	NYLON	1	BLACK