ROHS

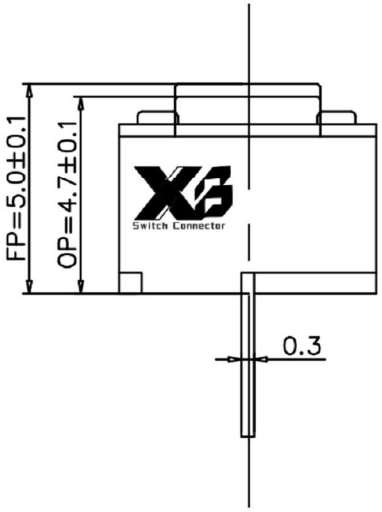

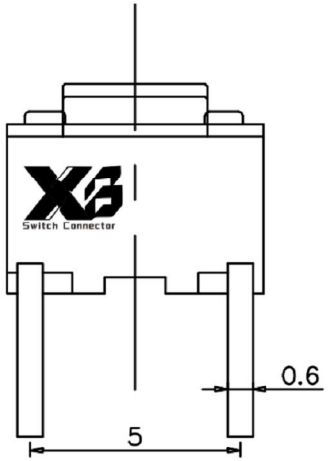

安装孔位图

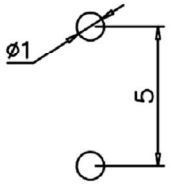

PCB LAYOUT MOUNTING PATTERN

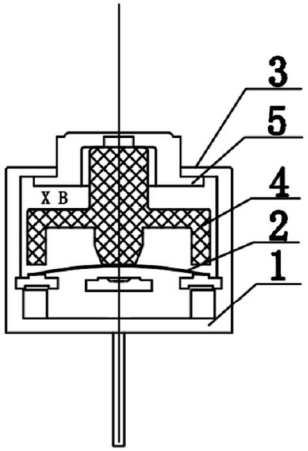

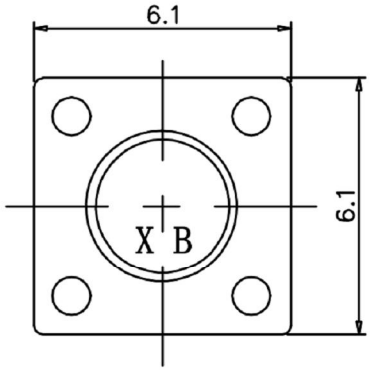

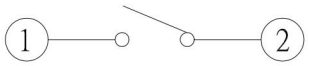

CIRCUIT DIAGRAM

SPECIFICATIONS

Rating	DC 12V 50mA
Contact Resistance	100mΩ Max.
Travel	0.3 ± 0.1mm
Operating Force	60gf 70gf 80gf 90gf
Operating Life(cycles)	100,0000

5	HS6.0428.050-5	按 钮	1	POM(黄)
4	HS6.0428.332-4	按 垫	1	橡胶
3	HS6.0428.030-3	盖 板	1	PPA(黑色)
2	HS6.0428.005-2	簧 片	1	单面银不锈钢0.05mm
1	HS6.0428.038-1	基 座 组	1	PPA(黑) 黄铜带H65Y0.3mm
序号	编号	材 料	数量	材 料

The material contained in this drawing is the property of XiBang. Any use other than that speclfically authorized by XiBang i5 prohibited. The above drawing IS subjected to change for improvement without prior notice.

东莞市溪榜电子有限公司
DONG GUAN XI BANG ELECTRONICS CO.,LTD

Switch Connector

TITLE : XB TACT SWITCH

MODEL : XB-TS-2DV050 按键开关有声 轻克力6.1x6.1x5.0mm

UNIT : MM	DWN.		DATE		
SCALE : 5 : 1	CHK'D		DATE		
VERSION 01	APPD.		DATE		

TOLERANCE
<=1.5mm ± 0.1
> 1.5mm ± 0.2
>=10.0mm ± 0.3

ANGLE TOL
± 2°

NO.	PART NAME	MATERIAL	QTY.	FINISHING
8	REEL	PS	1	BLUE
7	CARRIER	PS	1	CLEAR
6	COVER TAPE	PS	1	CLEAR
5	CONTACT	PBS STRIP	1	Ag CLAD
4	COVER	IRON STRIP	1	Ni PLATED
3	CASE	NYLON	1	BLACK
2	TERMINAL	BRASS STRIP	2	Ag PLATED
1	KNOB	NYLON	1	BLACK