ROHS

REV.	Q'TY	ECN. NO.	REASON&CONTENTS	SIGN	DATE
01			New release.		2017.02.06
02	1		DIP the foot length add 0.2 mm		2017.03.27
03	2		Base wall thickening 0.3 mm		2017.12.12
04			Add Spec		2022.08.03

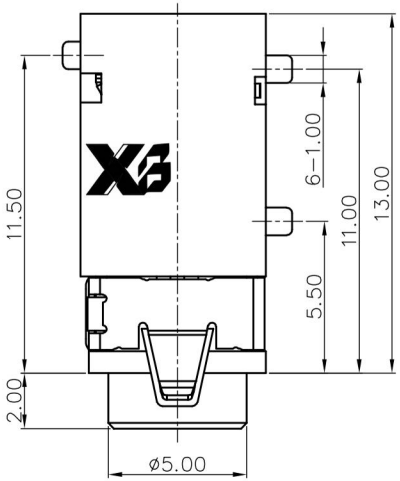

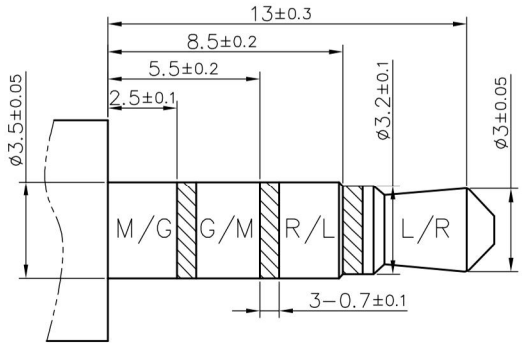

RECOMMENDED PLUG
ø3.5 4-POLE STANDARD PLUG

料号说明:
XB-PJ32850 - □ ** □□ A 00 □
(1) (2) (3) (4) (5) (6) (7)
(1):成品系列号.
(2):电路类型: I
(3):塑胶原材料:
LC=LCP
10=PA10T
(4):塑胶颜色:
0A=黑色
(5):端子电镀:
A=镀银10u"
(6):定义项:
00=无指定
(7):包装方式:
1=载带包装

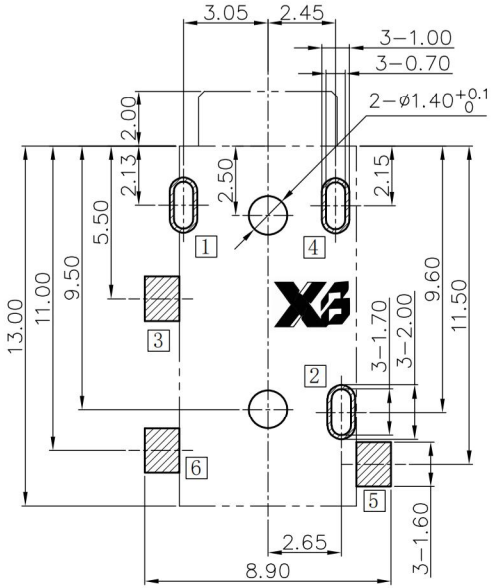

PCB HOLES(TOP VIEW)
NOTE: GENERAL TOLERANCE: ±0.05mm

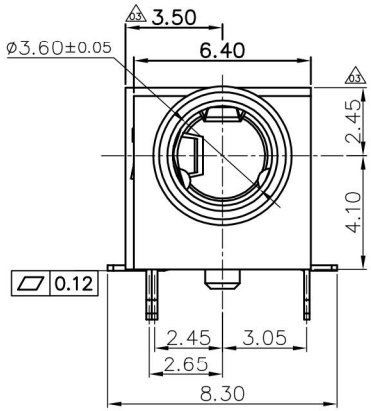

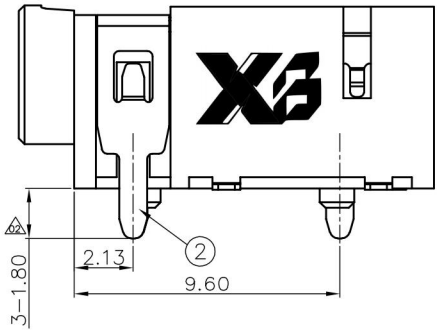

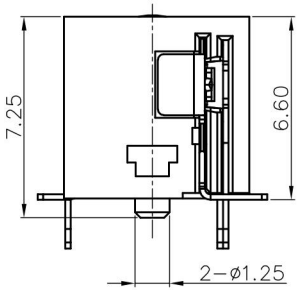

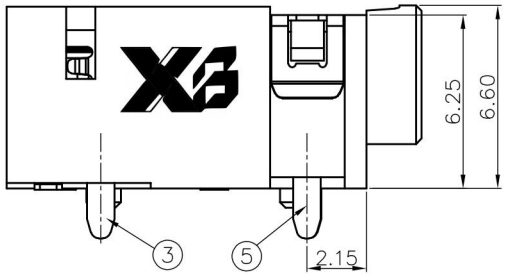

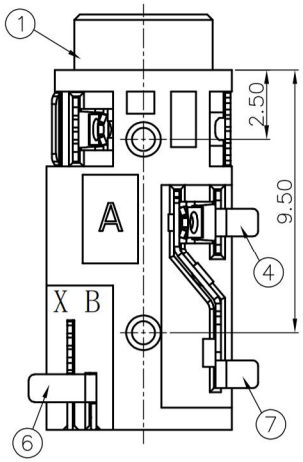

Specification:
1. Rating : DC 30V 0.5A;
2. Contact resistance: ≤50mΩ;
   After test: ≤100mΩ
3. Insulation resistance: ≥100MΩ (500VDC);
   After test: ≥50MΩ
4. Withstand voltage: 500VAC ;
5. Insertion and extraction force: 3N～30N;
6. life test: 5000cycles min;
7. Operation temperature range: -20℃～70℃;
8. Preservation temperature range: -40℃～85℃;

Model No.	XB-PJ32850-I
Schematic code	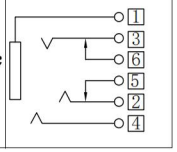

NO.	DESCRIPTION	Q'TY	MATERIAL	REMARK
⑦	Shunt terminal 6	1	Phosphor bronze t=0.20	1st:Ni40U" 2st:Ag10U"Min
⑥	Shunt terminal 5	1	Phosphor bronze t=0.20	
⑤	Ring B spring 4	1	Phosphor bronze t=0.20	
④	Ring A spring 3	1	Phosphor bronze t=0.20	
③	Tip spring 2	1	Phosphor bronze t=0.20	
②	Earth spring 1	1	Phosphor bronze t=0.20	
①	Housing	1	Hi-Tem. Thermoplastic	Black

THIS DOCUMENT IS THE SOLE PROPERTY OF XI BANG ELECTRONICS CO., LTD. AND SHOULD NOT BE USED IN WHOLE OR INPART WITHOUT PRIOR WRITTEN PERMISSION.

UNIT: MM
THIRD ANGLE

TOLERANCE	
DIMENSIONS	ANGLES
.X ±0.50	X ±5°
.XX ±0.30	.X ±3°
.XXX ±0.15	.XX ±2°

TYPE: ø3.5 PHONE JACK

MODEL NO: XB-PJ32850-I**0AA001

DRAWING TYPE: CUSTOMER DRAWING

DRAWING NO: XB-CR-0000-****

SCALE	VER.	PAGE
N/A	04	1/1

DESIGNER BY:
CHECK BY:
APPROVED BY:

东莞市溪榜电子有限公司
Switch Connector DONG GUAN XI BANG ELECTRONICS CO., LTD