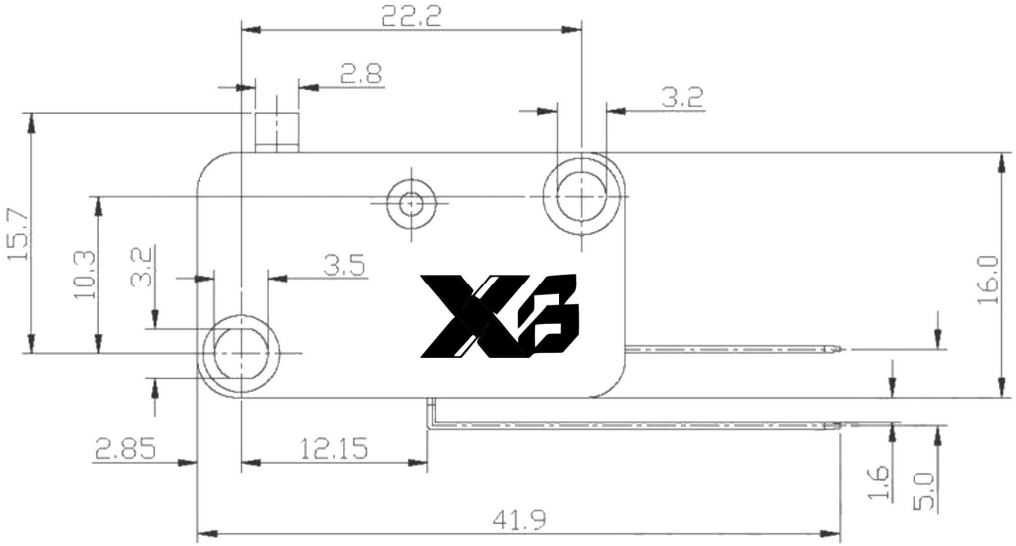

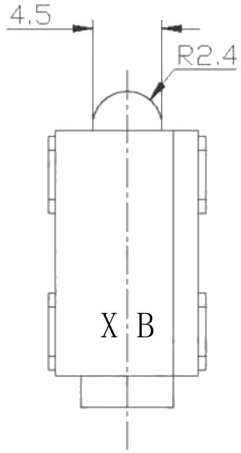

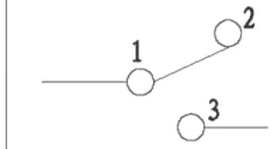

SCHEMATIC

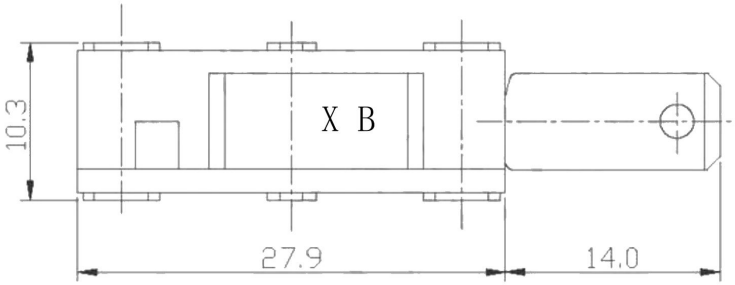

Ploscsti vtic A6.3×□0.8

Terminal DIN46244

Switch Connector

东莞市溪榜电子有限公司

DONG GUAN XI BANG ELECTRONICS CO.,LTD

TITLE : MICRO SWITCH					
MODEL : MX-316 (W106)					
UNIT : MM	DWN.		DATE		
SCALE : 2 : 1	CHK'D		DATE		
VERSION 01	APPD.		DATE		

TOLERANCE	ANGLE TOL
<= 1.5mm ±0.1	±2°
> 1.5mm ±0.2	

NO.	PART NAME	MATERIAL	QTY.	FINISHING