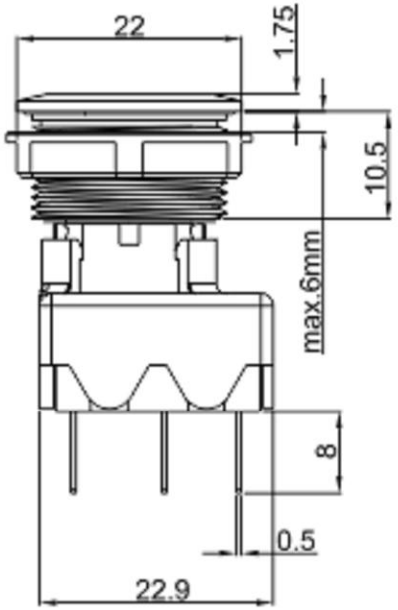

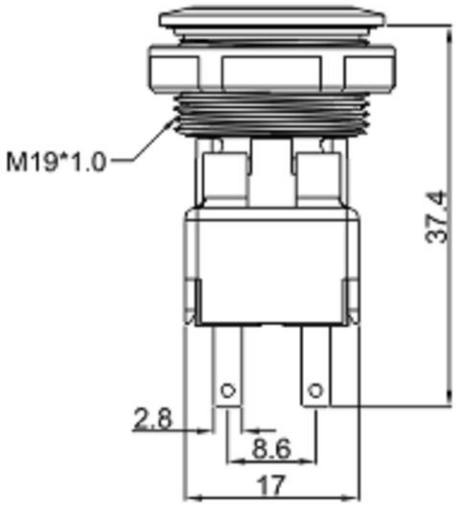

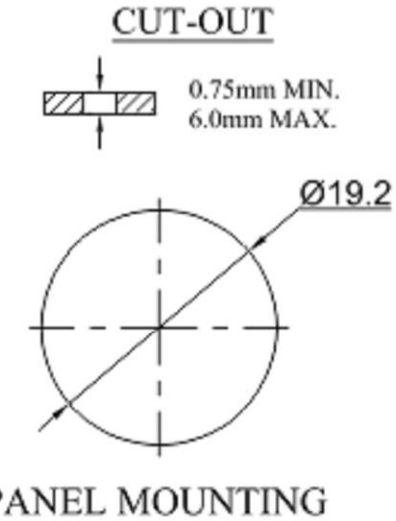

ROHS

产品规格:

Rating: 5A/10A/16A 125VAC ;5A/10A16A 250VAC ;

Contact Resistance: 50mΩ Max. ;

Insulation Resistance: DC 500V 100MΩ Min. ;

Dielectric Strength: AC 1500V 1 minute

Total Travel: 1.0±0. 4mm

Operating Force: 500±100gf

Mechanical Life: Over 30,000 cycles

Electrical Life: Over 10,000 cycles

Operating Temperation: -25°C~85°C

Protection type: IP40(terminal side), IP67 (Panel waterproof)

Mechanical ollision protection type: IK07.

应用领域:

- Outdoor Controls ·户外控制
- Security Equipment ·安全设备
- Medical Equipment ·医疗设备
- Food Processing Equipment ·食品加工设备
- Military Equipment ·军用设备
- Industrial Machinery ·工业机械
- Transportation: Mass-Transit, Lift Trucks

·运输: 大众运输, 起重卡车

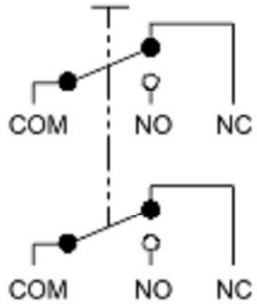

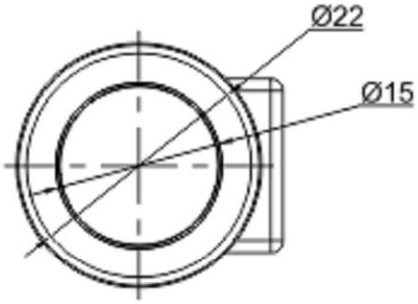

MATERIAL:

Actuator: SUS ;
Top Base: SUS;
Buttom Base:PA66+GF ;
Terminal: Brass,Silver plated ;
Nut: Brass, Ni plated .

The material contained in this drawing is the property of XiBang. Any use other than that speclfically authorized by XiBang i5 prohibited. The above drawing IS subjected to change for improvement without prior notice.

LED Specifications

LED 类型	双向LED灯珠（交直流通用）		
寿 命	40000小时（参考值）		
额定电压	AC/DC12V	AC/DC24V	AC/DC110V
	AC/DC36V	AC/DC48V	AC/DC220V
额定电流	约15mA		约3mA
降压方式	采用3V灯，需内置电阻		

灯发光颜色 X Emitted color X		最小	一般	最大	额定电流 (mA)
		顺向电压(V)			
W6	白色	5.0	6.0	9.0	15
U6	蓝色	5.0	6.0	9.0	15
G6	纯绿色	5.0	6.0	9.0	15
Y6	黄色	5.0	6.0	9.0	15
R6	红色	5.0	6.0	9.0	15
W3	白色	2.8	3.0	3.4	15
U3	蓝色	2.8	3.0	3.4	15
G3	纯绿色	2.8	3.0	3.4	15
Y2	黄色	1.8	2.0	2.4	15
R2	红色	1.8	2.0	2.4	15

Switch Connector

东莞市溪榜电子有限公司
DONG GUAN XI BANG ELECTRONICS CO.,LTD

TITLE : METAL PUHS BUTTON SWITCH

MODEL : XB-PSM19-23M-FS-NNN-SN-A

UNIT :	MM	DWN.	ZENQ. CHEN	DATE	
SCALE :	3 : 1	CHK'D	PENG. GAO	DATE	
VERSION	01	APPD.	FEI. LONG. HE	DATE	

TOLERANCE	ANGLE
<=1.5mm±0.1 > 1.5mm±0.2 >=10mm±0.3	±2°

NO.	PART NAME	MATERIAL	QTY.	FINISHING
7	SPRING	STEEL WIRE	1	NATURE
6	STEEL BALL	STEEL	1	NATURE
5	BOARD	PHENOLIC RESIN	1	NATURE
4	CONTACT CLIP	PBS STRIP	2	Ag PLATED
3	FRAME	IRON STRIP	1	Ni PLATED
2	TERMINAL	BRASS STRIP	8	Ag PLATED
1	KNOB	POM	1	BLACK