REV. LTR.	DESCRIPTION	SIGN	DATE

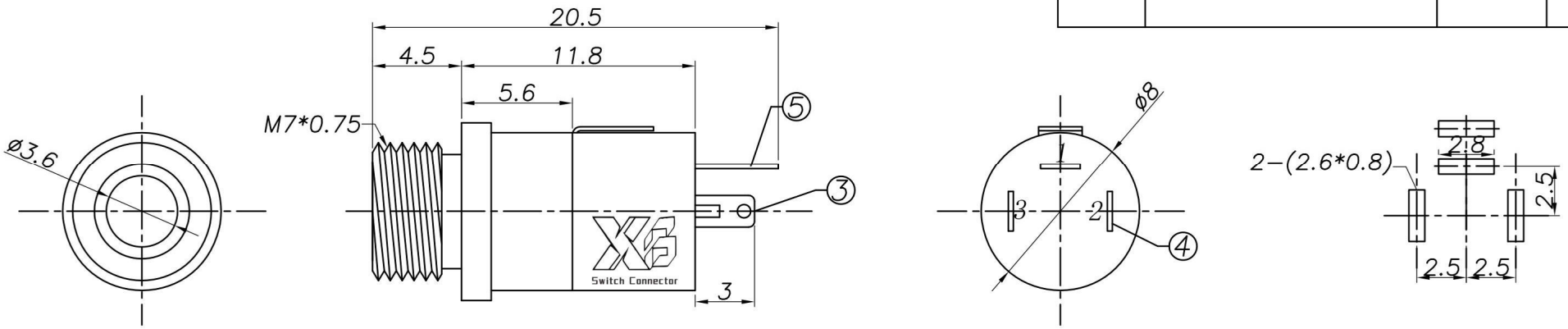

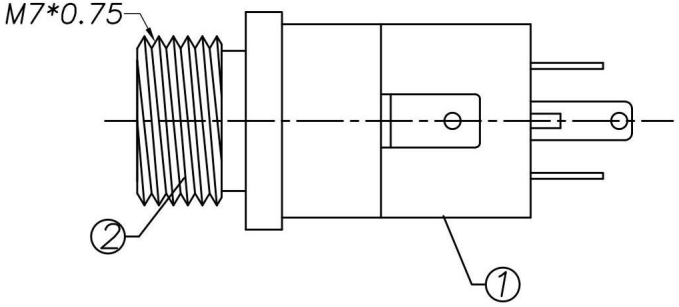

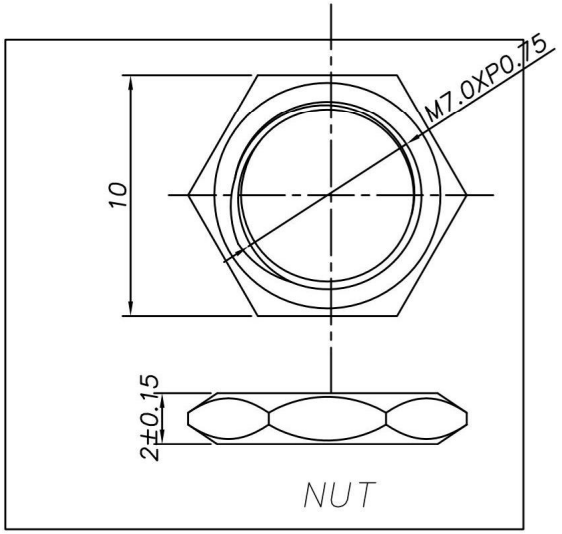

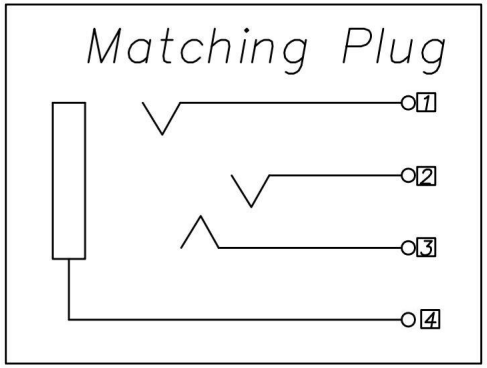

SPECIFICATION

1.Rating ：DC 30V 0.5A；
2.Contact resistance：≤30mΩ；
3.Insulation resistance：≥100MΩ (DC250V)；
4.Withstand voltage：500VAC ；
5.Insertion and extraction force：3-30N;
6.life test：5,000 cycles。

NO.	DESCRIPTION	QTY	MATERIAL	PLATING
⑤	Earth terminal	1	Phosphor bronze	镀银
④	Tip spring	1	Phosphor bronze	镀银
③	Ring spring	1	Brass	镀银
②	Bushing	1	Brass	镀铜锡
①	Housing	1	PBT	

UNIT: MM	TYPE:	MODEL NO:	PAPER NO: A4		PAGE 1 OF 1	
	PHONE JACK	XB-PJ-392A-4P	TOLERANCE	ANGLES	SCALE	VER
			±0.2	±2°	FULL	1

DESIGNER BY:	
CHECK BY:	
APPROVED BY:	

东莞市溪榜电子有限公司
DONG GUAN XI BANG ELECTRONI CS CO., LTD.