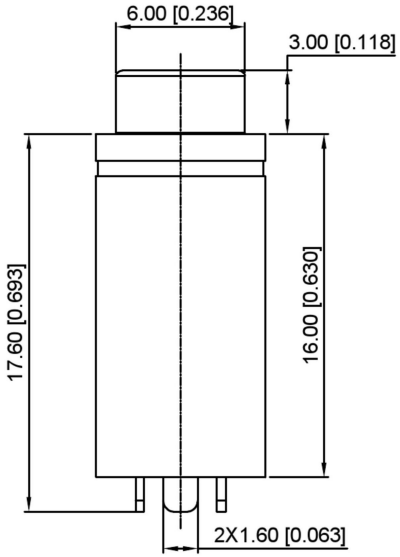

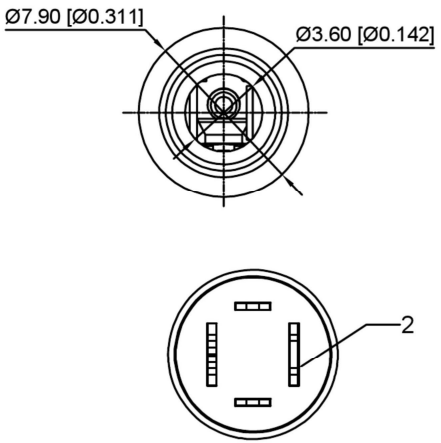

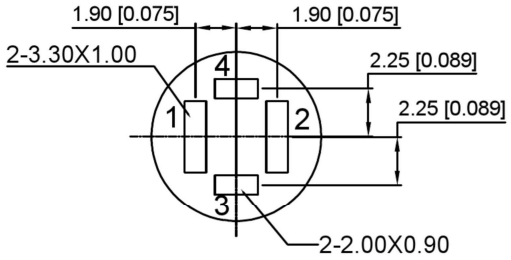

PCB LAYOUT TOP VIEW

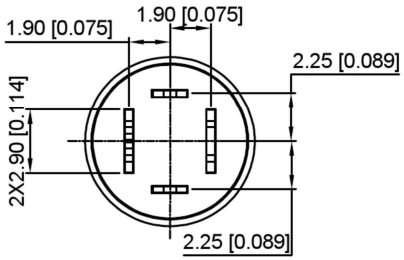

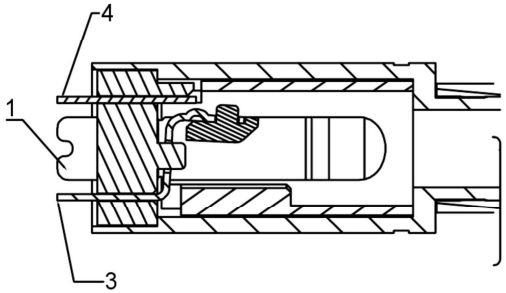

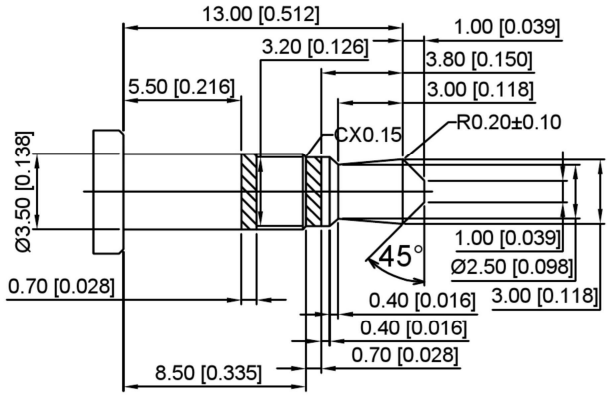

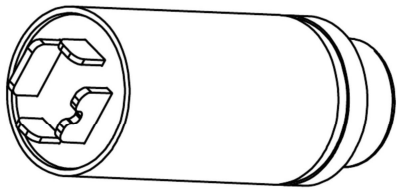

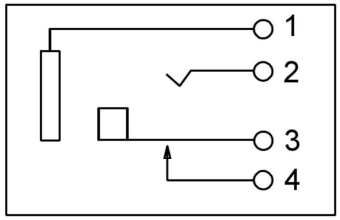

CIRCUIT DIAGRAM

	MATERIAL	PLATING
terminal 1	Phosphor Bronze	tin
terminal 2	Phosphor Bronze	tin
terminal 3	Phosphor Bronze	tin
terminal 4	Phosphor Bronze	tin
plastic	Pbt	

				ANGLAR	±5°
				L≤ 4	±0.2
				4<L≤ 16	±0.3
				16<L≤ 63	±0.4
	DATE	REVISED	APPROVED	L> 63	±0.5
REVISIONS				UNSPECIFIED TOLERANCES	

www.alpsr.com www.gdxjdz.com www.xbswitch.com

DSND		SCALE: N/A	MODEL TYPE: 3.5 PHONE JACK
DWN		VIEW:	PART NO.: PJ-3108
CHKD		UNIT: mm/in	DWG NO.:
APPD		SIZE: A4	

DONG GUAN XI BANG ELECTRONIC CO., LTD

WEIGHT	SHEET	REVISION
	1/1	A0