CAD FILE:

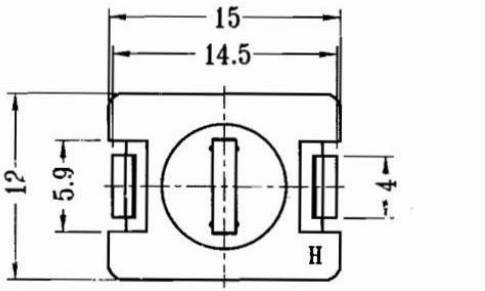

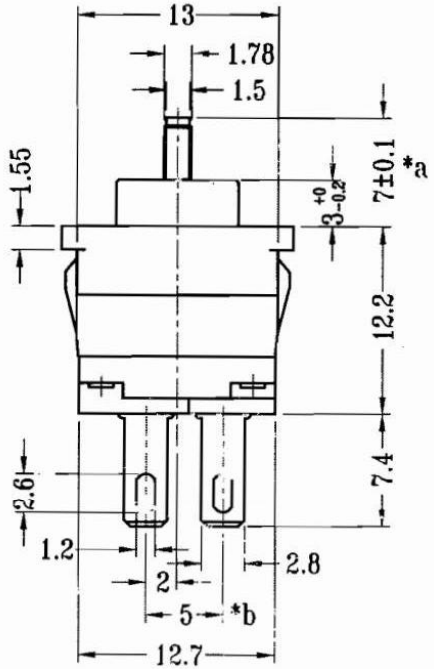

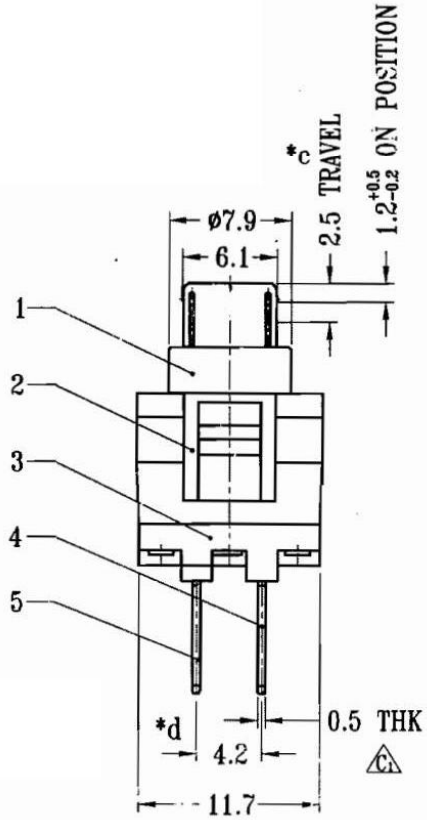

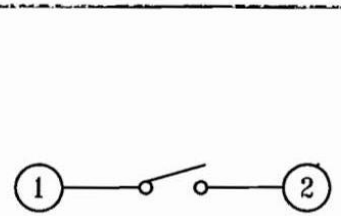

SCHEMATIC

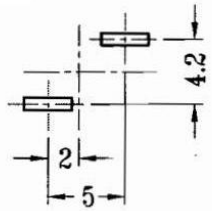

P.C.B LAYOUT
TOP VIEW

注:"*"表示关键尺寸(4个)

NO.	PARTS	MATERIALS	Q'TY	FINISH
8				
7	SPRING	STEEL WIRE	1	NATURAL
6	CONTACT	BRASS	1	Au PLATED
5	U-TERMINAL	BRASS STRIP	2	Ag PLATED OVER Ni PLATED
4	V-TERMINAL	BRASS STRIP	2	Ag PLATED OVER Ni PLATED
3	CASE	NYLON+F.G	1	BLACK
2	COVER	PC	1	BLACK
1	KNOB	POM	1	WHITE

TOLERANCE UNLESS SPECIFIED
WITHIN 1.5mm : ±0.1mm
OVER 1.5mm : ±0.2mm

ISSUE	DATE	DESCRIPTIONS OF REVISION	APPD.
B	20-Aug-2009	C1 脚仔原尺寸为:0.6 THK	

TITLE : VERTICAL PUSH SWITCH
UNIT : mm
DRWG NO.: XB-PB-11E04
MODEL: XB-PB-11E04
SCALE: 2:1
DWN. 陈丽冰 20-Aug-2009
CHK'D 20-Aug-2009
APPD. 20-8-2009
DONG GUAN XI BANG ELECTRONI CS CO., LTD.