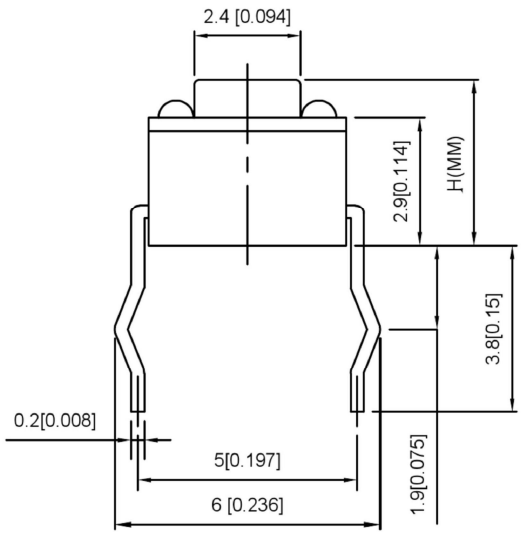

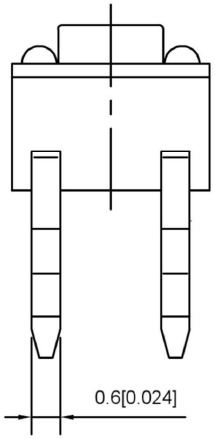

CIRCUIT DIAGRAM

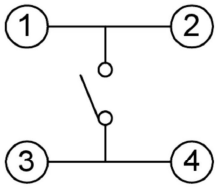

Code-x	H
A	3.8
B	4.3
C	4.5
D	5.0
E	5.5
F	6.0
G	6.5
H	7.0
I	7.5
J	8.0
K	8.5
L	9.0

P.C.B MOUNTING PATTERN DIMENSION
The following soldering patterns are recommended for reflow soldering

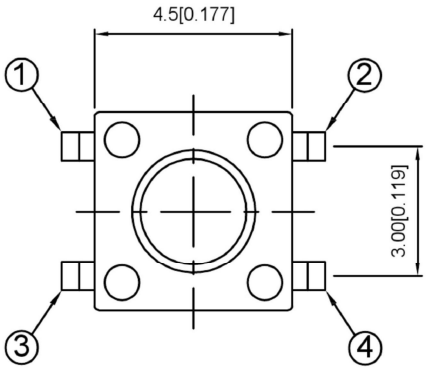

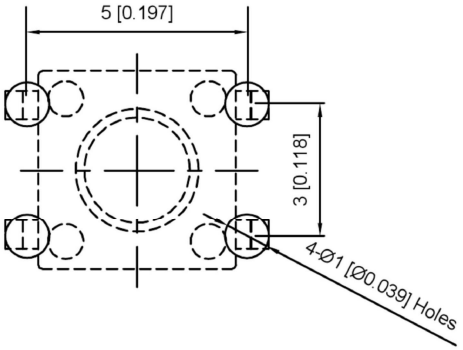

SPECIFICATION

Contact Rating:	50mA,12V DC
Contact Resistance:	100mΩ max
Insulation Resistance:	100mΩ min.500V DC
Dielectric Strength:	250V AC/1minute
Travel:	0.25mm
Operating Temp:	-30℃~+85℃
Storage Temp:	-30℃~+80℃

PAPT NO	TC-11 09-X-X
Operating Force	A:100gf B:160gf C:260gf
Height	Code-X

ITEM	PAPT NAMF	TER,NO	QTY	MATERIAL	FINISHING	REMARK
⑤	Terminal	—	4	Brass（0.30t）	Plating silvering	—
④	Contact	—	1	F.ag/Sus	Natural	—
③	Base	—	1	Pa46		—
②	Cover	—	1	Spcc	Plating Nickel	—
①	Keystake	—	1	Pa46		—

DATE	REVISED	APPROVED		
			ANGLAR	±5°
			L≤ 4	±0.2
			4<L≤ 16	±0.3
			16<L≤ 63	±0.4
			L> 63	±0.5
			UNSPECIFIED TOLERANCES	

DSND		SCALE: N/A	MODEL TYPE: TACT SWITCH
DWN		VIEW:	PART NO.: TC-1109-X-X
CHKD		UNIT: mm/in	DWG NO.:
APPD		SIZE: A4	

DONG GUAN XI BANG ELECTRONIC CO., LTD

WEIGHT	SHEET	REVISIC
	1/1	A0

www.alpsr.com www.gdxjdz.com www.xbswitch.com