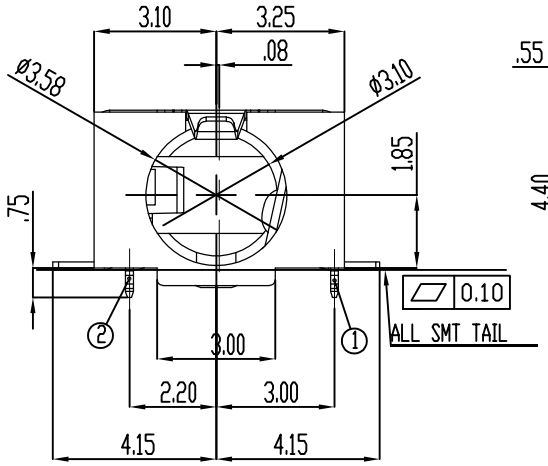

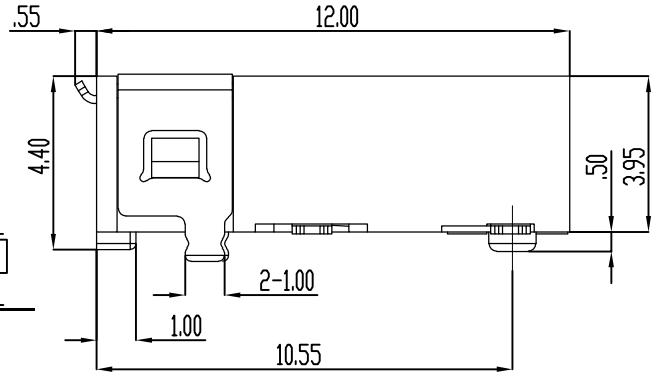

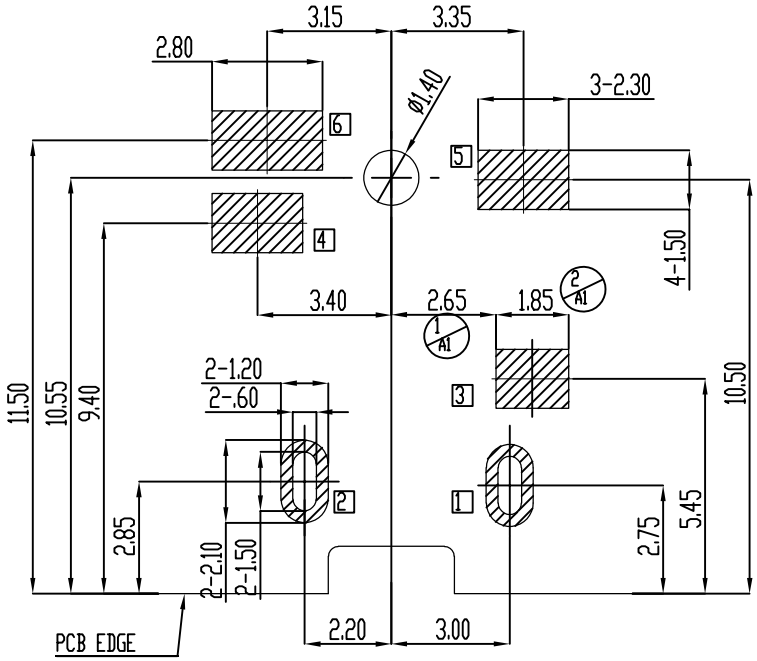

RECOMMENDED PCB LAYOUT(TOP VIEW)
(GENERAL TOLERANCE ± 0.05)

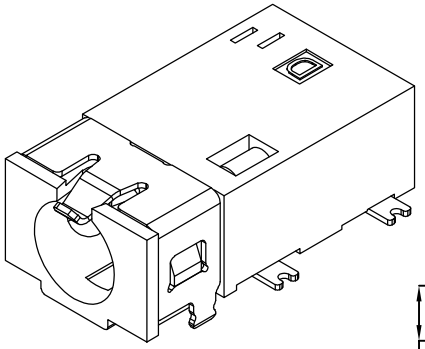

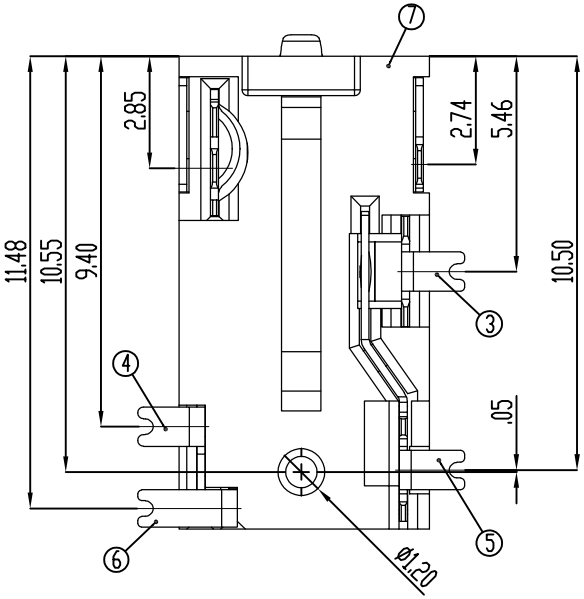

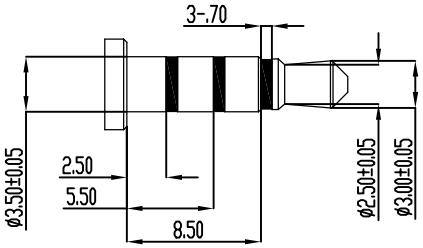

ø 3.50mm 4 POLE PLUG
DETAIL DRAWING(2:1)

NOTES:
1.CONTACT CURRENT RATING: 12V 1A.
2. CONTACT RESISTANCE: 50 mΩ MAX.;
3. INSULATION RESISTANCE: 100MΩ MIN.;
4. DIELECTRIC WITHSTANDING: 500V AC MIN.;
5. DURABILITY: 5,000 CYCLES MIN.;
6. CONNECTOR MATING FORCES:
29.4N (3.00Kgf) MAX.;
7. CONNECTOR UNMATING FORCES:
2.94N(0.30Kgf) MIN.;

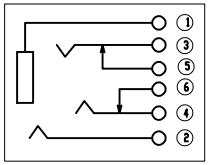

SCHEMATIC

NO.	DESCRIPTION	MAT.L	COLOR	REMARK
7	HOUSING	HIGH TEMP	BLACK	———
6	TERMINAL 6	COPPER ALLOY	———	Au PLATED
5	TERMINAL 5	COPPER ALLOY	———	Au PLATED
4	TERMINAL 4	COPPER ALLOY	———	Au PLATED
3	TERMINAL 3	COPPER ALLOY	———	Au PLATED
2	TERMINAL 2	COPPER ALLOY	———	Au PLATED
1	TERMINAL 1	COPPER ALLOY	———	Au PLATED

东莞市溪榜电子有限公司
DONG GUAN XI BANG ELECTRONI CS CO., LTD.

TITLE: ø 3.50 mm PHONE JACK CONNECTOR

PART NO.	XB-J313-BT06G1-001
PRODUCT SPEC.	J313-B
C ING FILE NAME.	------
SCALE 5:1	UNIT:mm A4 SHEET: 1 of 1

ECN NO.	REV	DATE	DESCRIPTION	CHANGE	APPRO.
———	A	07/13/'20	新版发行	———	———

Angle	±2°
X	±0.35
.X	±0.25
.XX	±0.20

GENERAL TOLERANCE UNLESS OTHERWISE NOTED

DESIGN	LITAO	07/13/'20
CHECK	XUBO	07/13/'20
APPRO.	HEYONG	07/13/'20