CAD FILE:

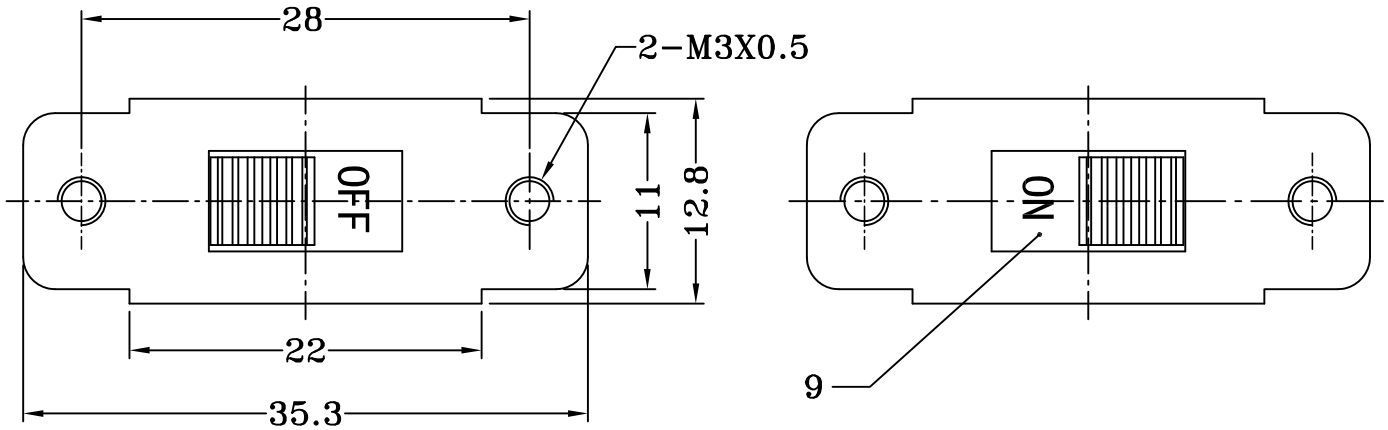

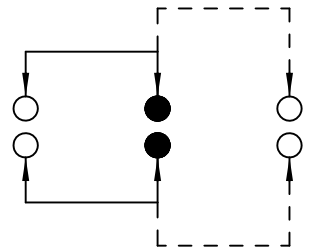

SCHEMATIC (NON-SHORTING)

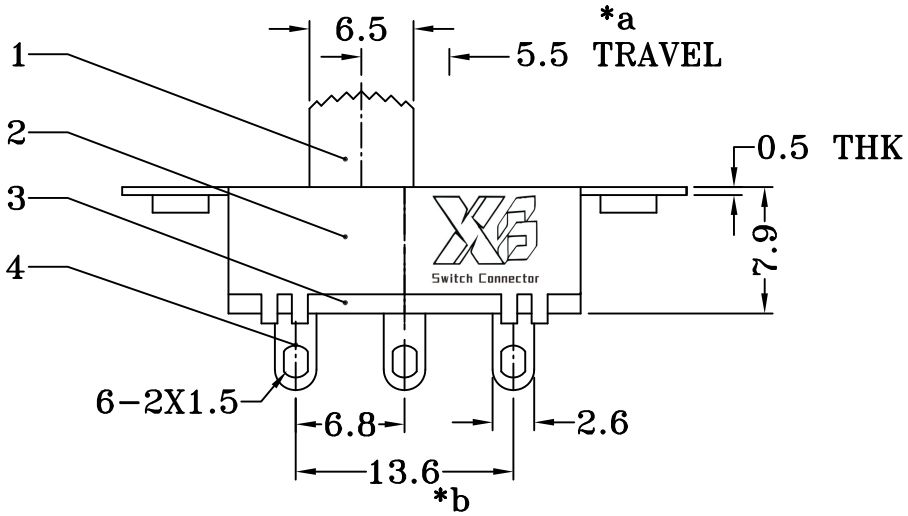

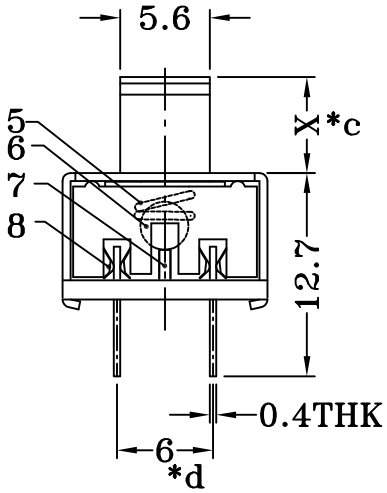

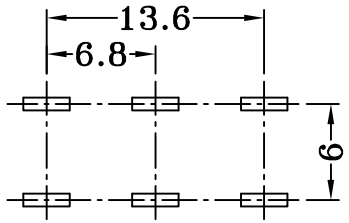

P.C.B LAYOUT
BOTTOM VIEW

注:"*"表示关键尺寸（4个）.

NO.	PARTS	MATERIALS	Q'TY	FINISH
9	SHEEL METAL	ALUMINUM	1	BLACK
8	CONTACT CLIP	PBS STRIP	2	Ag PLATED
7	POSITION PLATE	STEEL STRIP	1	Ni PLATED
6	STEEL BALL	STEEL	1	NATURAL
5	SPRING	STEEL WIRE	1	NATURAL
4	TERMINAL	BRASS STRIP	6	Ag PLATED
3	BASE	PHENOLIC RESIN	1	NATURAL
2	FRAME	STEEL STRIP	1	Ni PLATED
1	KNOB	POM	1	BLACK

TOLERANCE UNLESS SPECIFIED
WITHIN 1.5mm : ±0.1mm
OVER 1.5mm : ±0.2mm

ISSUE	DATE	DESCRIPTIONS OF REVISION	APPD.
A	2012-8-4	初 版	

TITLE : VERTICAL SLIDE SWITCH
MODEL: XB-SS-22K23
UNIT : mm
SCALE: 2 : 1
DRWG NO.: XB-SS-22K23
DWN.
CHK'D
APPD.

东莞市溪榜电子有限公司
DONG GUAN XI BANG ELECTRONI CS CO., LTD.